Low Profile Trolley & Garage Jacks

- Professional range of premium quality low profile trolley jacks
- Manufactured and individually tested in Europe
- Tested to AS/NZS 2693, ANSI PALD & EN1494 Standards
- Range in capacity from 2,000 to 3,000kg
- Manufactured to meet the strictest international safety standards
- Perfect for jacking vehicles with low ground clearances

Safety overload valve

Hydraulic stroke limitation

LCS lowering control system

Operation by the "dead man's" principle

ARMGR2 ARMGR3 ARMGR2X

Features

- Low profile 90mm minimum height on GR2 & GR3
- Extra low profile 75mm minimum height on GR2X
- Fitted with polyamide wheels and castors to facilitate manoeuvrability
- Foot pedal for quick approach of lifting saddle to load
- Safety overload valve which prevents the jack from being used beyond the rated capacity
- Lowering operation by the "dead man's" principle (the operation is halted if the user accidentally loses control)
- High quality durable seals and internal components for extended service life

T style handles

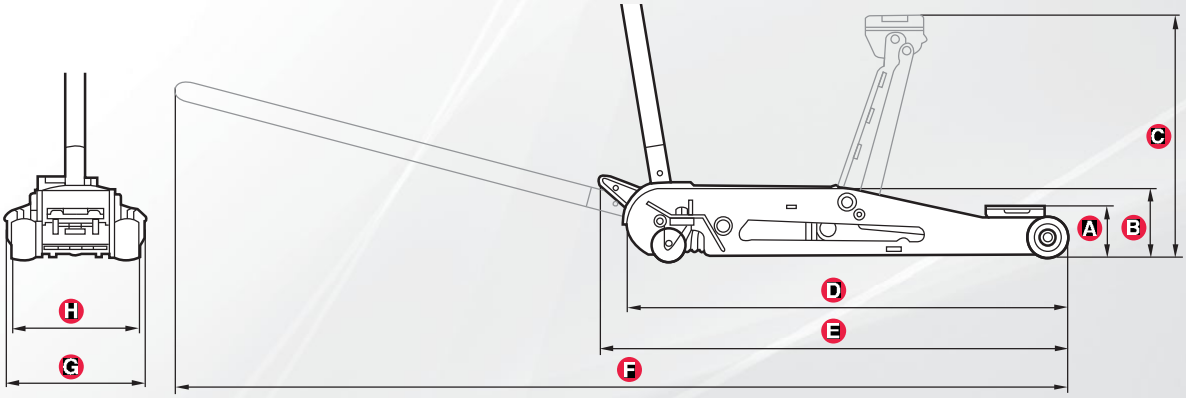

Part Number	Capacity (kg)	A	B	C	D	E	F	G	H	Weight (kg)
ARMGR2	2,000	90	135	470	850	905	1720	270	250	30.0
ARMGR3	3,000	90	135	470	850	905	1720	270	250	33.5
ARMGR2X	2,000	75	137.5	520	920	975	1800	270	250	35.5

* Measurements in mm